Ferrites and accessories

Packing

Date: September 2006

© EPCOS AG 2006. Reproduction, publication and dissemination of this data sheet and the information contained therein without EPCOS' prior express consent is prohibited.

Packing

Survey of packing modes

Ferrite cores

	Type	Packing	Para.	Page
RM cores	RM 4 … RM 10 RM 12, RM 14	Blister tape Standard tray	3.2 2.2.1	6 4
PM cores	PM 50/39 … PM 114/93	Standard tray	2.2.1	4
P cores	All P cores P 9 × 5 … P 22 × 13	Standard tray Blister tape on request	2.2.1 3.2	4 6
P core halves	7.35 × 3.6 … 150 × 30	Standard tray	2.2.1	4
EP cores	EP 5 … EP 20, EPX 9/9 EPX 7/9, EPX 10, EPO 13	Standard tray Blister tape on request	2.2.1 3.2	4 6
E cores	E 5 … E 10 E 5 and E 6.3 Core length 12.6 … 36 mm Core length > 36 mm E 47	Standard tray Blister tape on request Block packing Standard tray Skin packing	2.2.1 3.3 2.2.2 2.2.1 3.6	4 8 4 4 10
ELP cores	All ELP cores ELP 43, I 43	Standard tray Skin packing	2.2.1 3.6	4 10
ER cores	All ER cores ER 32	Standard tray (blister tape on request) Skin packing	2.2.1 3.2 3.6	4 6 10
EQ cores ETD cores EFD cores EV cores		Standard tray	2.2.1	4
U and I cores		Standard tray	2.2.1	4
Toroids (ring cores)	Packing depends on size and version (coated/uncoated)	Standard tray Box Bag	2.2.1 2.3.2 2.3.1	4 5 5
Double-aperture cores		Bag	2.3.1	5

Accessories

Coil formers	Polystyrene boards, carton boxes, bags and blister trays	2.4	5
Mounting assemblies	Boxes	2.3.2	5
Clamps	Bags (individual clamps)	2.3.1	5
Insulating washers	Bags (individual washers), boxes	2.3.1	5
Insulating washers	Packed on reels	2.3.2	5

Packing

1 General information

Our product packaging modes ensure maximum protection against damage during transportation. Moreover, our packing materials are selected with environmental considerations in mind. They are marked with the appropriate recycling symbols.

Because of the large variety of types and sizes, we use five basic kinds of packing, which are described in points 2 and 3 below:

- Blister tape
- Tray
- Container
- Reel
- Magazine

The packing units are based on the following system:

1.1 Packing unit (PU)

Usually, a packing unit is a collection of a number of basic packages. The size of the packing unit is stated for the particular components in their data sheets. When ordering, please state complete packing units if possible. We reserve the right to round the ordered quantity accordingly.

1.2 Dispatch unit

A number of packing units are combined to form a dispatch unit. Standard dispatch units for large quantities are a Europallet or pallet carton. For small quantities, folding corrugated cardboard boxes are used in standard sizes. In the case of small quantities a dispatch unit may also include packages with other components.

1.3 Bar-code standard label

On the product packing label (standard label) we include bar-code information in addition to plain text. In addition to benefits relating to the internal flow of goods, this provides above all a more rapid and error-free means of identification checking for the customer.

Packing

Examples of barcode labels with production ID (1P), lot number (1T), date code (10D), production number (30P) and quantity (Q)

Example for core label

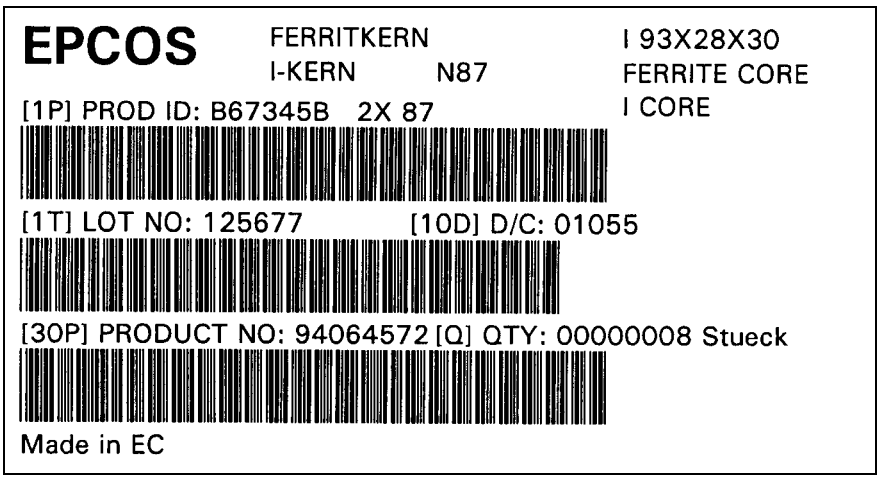

FAL0685-5

Example for accessories label

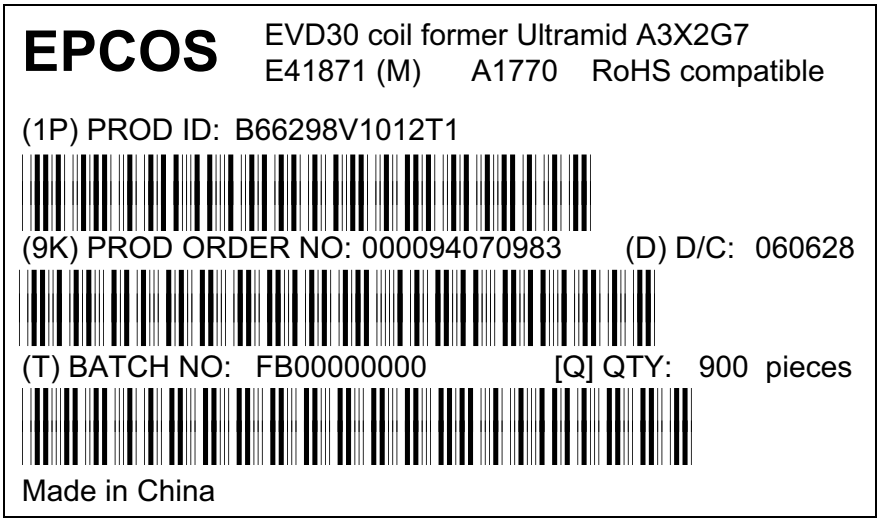

FAL0684-W

Example of a customer-specific barcode label

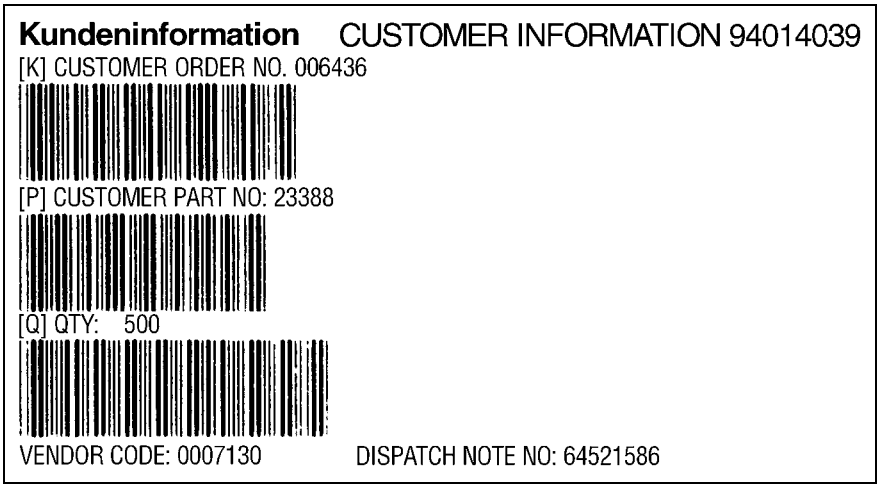

FAL0698-2

2 Modes of packing

2.1 Blister tape

Blister packing was specially devised for handling by automatic systems but has also proved to be very good for conventional handling, especially where small quantities are concerned. See point 3.2 for a detailed description and a list of the core types that can be supplied in this type of packing.

2.2 Tray (pallet)

2.2.1 Standard tray

The polystyrene tray (basic package) is the standard packing for most types of core. The area of 200 mm × 300 mm corresponds to the module dimensions of DIN 55 510 and is based on the area of the 800 mm × 1200 mm Europallet. Depending on the overall height of the trays and the numbers contained, several trays will be stacked to form a packing unit and provided with a corrugated cardboard cover. For the protection of the cores the entire stack is also shrink-wrapped in polyethylene film.

Each core is enclosed in a separate compartment. When P cores and similar types are packed in sets, the halves of the core pairs are packed so that their pole faces are opposite one another. As a rule their association is identified by markings in the polystyrene (recessed webs, thinner webs). In the case of P 3.3 × 2.6 and P 4.6 × 4.1 cores the halves of a set are not located in a single tray but in different trays of a packing unit.

2.2.2 Block packing

For E and U core we prefer block packing in trays with the dimensions 200 mm × 300 mm. The symmetry, position, length and spacing of the blocks are always the same. The height of the tray is dependent on the size of the core. For the makeup of a packing unit see point 2.2.1.

Block packing can be supplied in boxes of corrugated cardboard (special packing unit!) on request.

Block packing permits highly rationalized handling and is designed for automatic processing.

Packing unit for standard or block packing

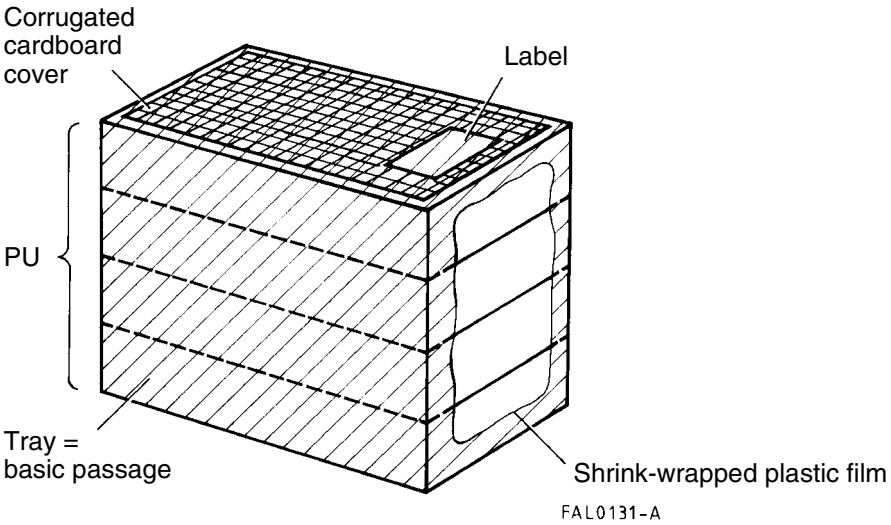

2.3 Container

2.3.1 Bag

Small ferrite parts are packed in flat polyethylene bags. The number per bag depends on the volume of the parts. Generally four bags in a corrugated cardboard box form a packing unit.

Small accessories (clamps, pinless and SMD coil formers) are also packed in this way. The size of the bag depends on the volume of the parts (packing unit).

2.3.2 Boxes

Coated ring cores of medium size are packed in cardboard boxes with cardboard or polyethylene foam inlays. The number per box depends on the volume of the cores.

Accessories (large mounting assemblies, clamps, washers packed on reels etc.) are packed in boxes of cardboard or corrugated cardboard.

2.4 Packing for coil formers

For coil formers we use different packing types depending on size, pin type and packing equipment. So we use polystyrene boards for some PTH coil formers like RM types. For most of the other PTH coil formers and some SMD coil formers we use cardboard boxes as bulk packaging. Coil formers without pins are mainly packed in plastic bags. For some SMD coil formers we also use blister tray packaging.

3 Delivery modes for automatic processing

3.1 General information on inductor production

The inductor parts described in the following can be handled by automatic manufacturing systems. In addition to automatic winding machines – which can be combined with wrapping, fluxing and soldering stations – flexible, high-performance automatic assembly lines are available. Design and packing of the individual parts (ferrite cores, coil formers, clamps, insulating washers and adjusting screws) have been optimized for automatic processing and permit easy feeding to the various stations of production lines.

We supply RM cores up to RM10 (P and EP cores on request) blister-taped in dispenser boxes. By inserting a plate-shaped resilient insulating washer between core and coil former, gluing can be dispensed with.

We also provide consulting services with examples of implementations to customers planning to introduce automatic production lines.

Production sequence

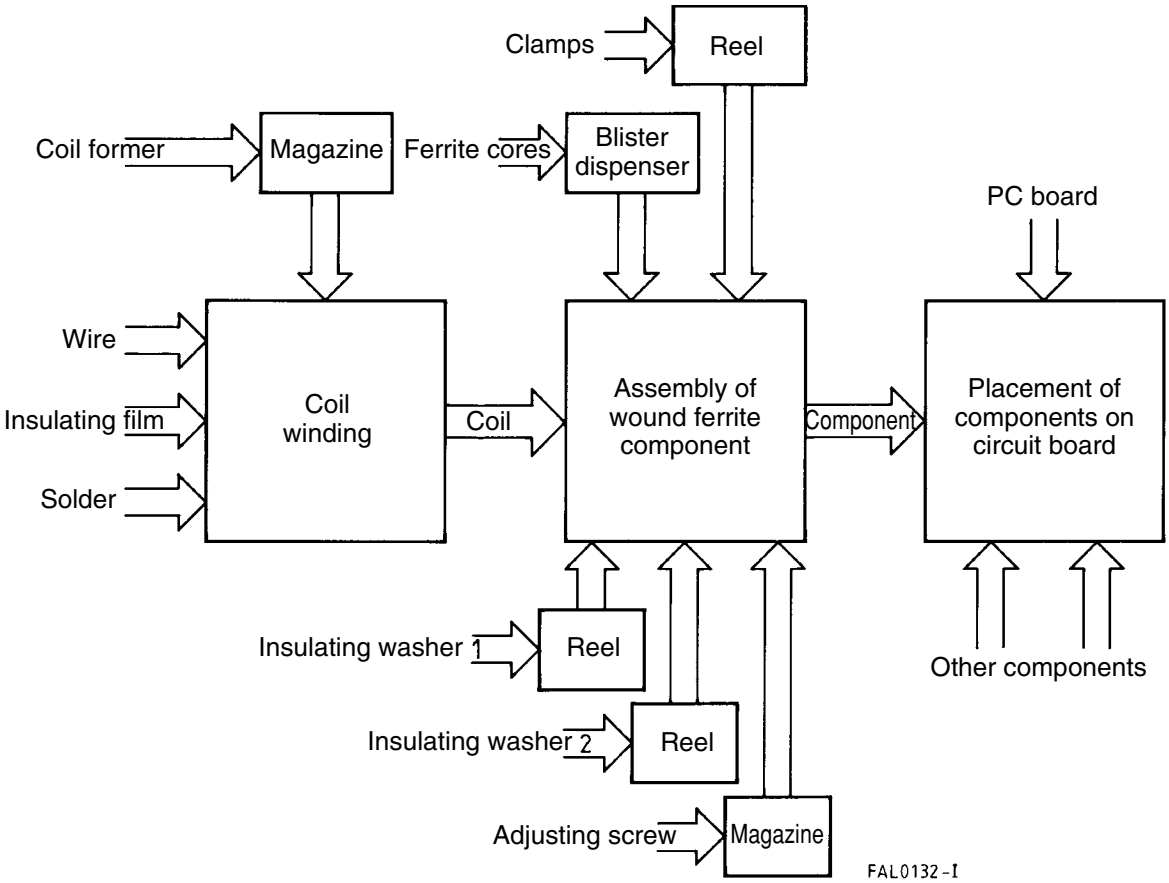

3.2 Cores in blister tape (strips)

The cores are packed in sets ready for assembly, i.e. a stamped core with the base upwards and an unstamped core (possibly with a threaded sleeve) with the pole face upwards. The blister tapes have a hole at one end for orientation purposes (see also illustration). The tapes are sealed with a paper cover. Looking at a tape with the hole on the left and the paper cover on top, then after

Packing

removing the paper cover the stamped cores will be in the upper row and the unstamped cores of the sets in the lower row.

Several blister tapes are combined in a box with a perforated tear-off cover (dispenser pack) to form a packing unit. The tapes are packed so that the orientation hole appears in the dispenser opening. The box is shrink-wrapped in polyethylene film.

The following table lists the core types which are available in blister tape:

Type	Dimensions of blister tape l × b × d mm	Spacing mm	Spacing upper/ lower row mm	Dimensions of dispenser pack l × b × h mm	Sets/ tape	Tapes/ box	Sets/ box	Approx. net weight g
RM cores								
RM 4	340 × 60 × 6.6	17.0	27.5	349 × 63 × 203	20	30	600	1000
RM 4 LP	340 × 60 × 5.0	17.0	27.5	349 × 63 × 203	20	40	800	
RM 5	340 × 60 × 8.0	17.0	27.5	349 × 63 × 203	20	25	500	1550
RM 6	340 × 60 × 8.0	17.0	27.5	349 × 63 × 203	20	25	500	2550
R 6	340 × 60 × 8.0	17.0	27.5	349 × 63 × 203	20	25	500	2550
RM 7	295 × 82 × 9.4	29.5	38.5	301 × 85 × 240	10	25	400	1925
RM 8	295 × 82 × 11.8	29.5	38.5	301 × 85 × 240	10	20	200	2600
RM 10	295 × 82 × 11.8	29.5	38.5	301 × 85 × 240	10	20	200	4600
RM 10 LP	295 × 82 × 9.4	29.5	38.5	301 × 85 × 240	10	25	250	
EP cores (on request)								
EP 7	340 × 60 × 5.0	17.0	27.5	349 × 63 × 203	20	40	800	1260
EP 10	340 × 60 × 8.0	17.0	27.5	349 × 63 × 203	20	25	500	1375
EP 13	340 × 60 × 8.0	17.0	27.5	349 × 63 × 203	20	25	500	2550
EP 17	295 × 82 × 11.8	29.5	38.5	301 × 85 × 240	10	20	200	2220
EP 20	295 × 82 × 11.8	29.5	38.5	301 × 85 × 240	10	20	200	5640
P cores (on request)								
P 9 × 5	340 × 60 × 4.0	17.0	27.5	349 × 63 × 203	20	50	1000	800
P 11 × 7	340 × 60 × 4.0	17.0	27.5	349 × 63 × 203	20	50	1000	1700
P 14 × 8	295 × 82 × 5.9	29.5	38.5	301 × 85 × 240	10	40	400	1280
P 18 × 11	295 × 82 × 9.4	29.5	38.5	301 × 85 × 240	10	25	250	1500
P 22 × 13	295 × 82 × 9.4	29.5	38.5	301 × 85 × 240	10	25	250	3250
E cores (tape/reel on request)					Pieces/reel		Pieces/box	
E 5	27000 × 12 × 2.7	4.0	4.0	370 × 340 × 100	6500		32500	
E 6.3	27000 × 12 × 2.7	4.0	8.0	370 × 340 × 100	3400		17000	

For ordering codes refer to the individual data sheets.

Dimensions are nominal; tolerances given in design drawings.

3.3 Cores in blister tape (reeled)

E 5 and E 6.3 cores can also be supplied taped and reeled as per IEC 60286-3, optionally in conductive or non-conductive tapes. The cores are oriented for automatic feeding. The tapes are sealed with a transparent cover tape and wound on 330-mm polystyrol reels. Each reel is identified with a bar code label and a release label.

3.4 Blister tapes

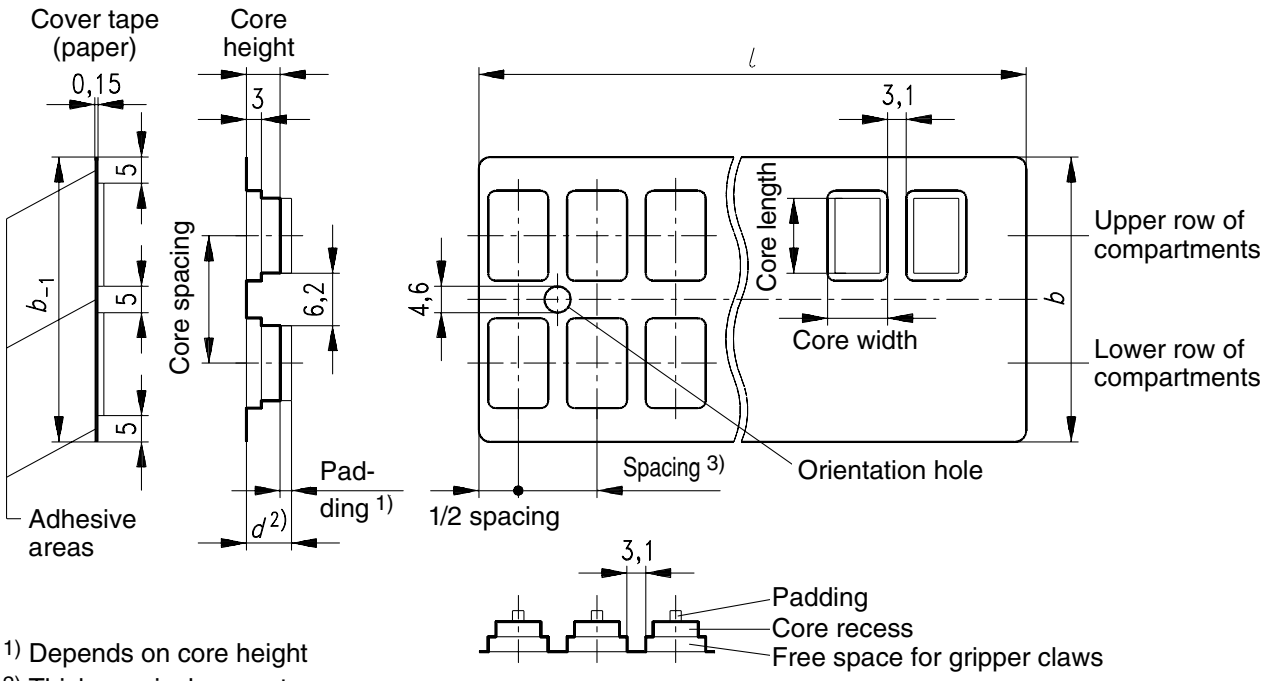

1) Depends on core height
2) Thickness incl. cover tape
3) For RM3: 2 sets per spacing

The blister compartments always comprise the following function spaces: a free space for the gripper claws, the recess in which the core rests and the padding.

The free space enables the cores to be removed by mechanical grippers. On the reverse side of the blister, these free spaces lead to a regular grid arrangement with a spacing of 6.2 mm and 3.1 mm. The blisters should be guided and stopped at these intervals. A hanging arrangement is to be preferred, because this avoids problems arising in case the blister height or padding thickness varies.

The core recess centers the core in the blister compartment.

The padding serves as protection during transport and as spacing to achieve correct filling of the dispenser pack. The shape and position of the padding may vary, depending on the production method used. All padding dimensions given must therefore be considered to be subject to change at any time.

3.5 Dispenser pack

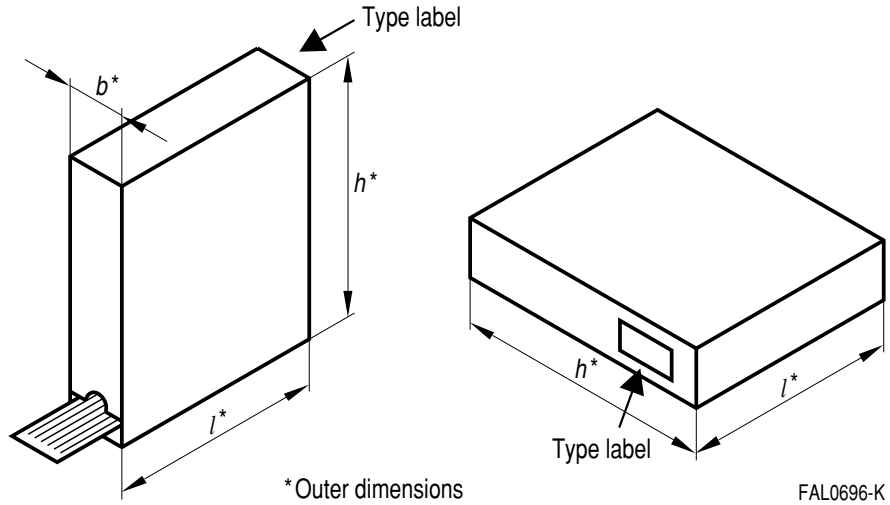

To open a blister tape manually, peel back the paper cover tape smoothly but not too quickly, along the axis of the tape as shown in the following illustration.

When opening a blister tape automatically, it is advisable not to completely remove the paper cover. Rather, the cover paper should be divided up by means of 4 longitudinal cuts so that the mating surfaces remain on the blister (cf. blister tape illustration). The paper strips produced above the two rows of compartments can then be easily lifted. This avoids malfunctions resulting from fluctuations in the adhesive properties of the paper sealing tape.

3.6 Skin packing

Skin packing is a new and very compact packing method.

Several cores are placed on a cardboard pallet and sealed in GLTE film by heat shrinking. The various pallets are then stacked in a cardboard box.

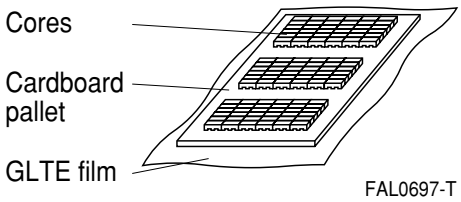

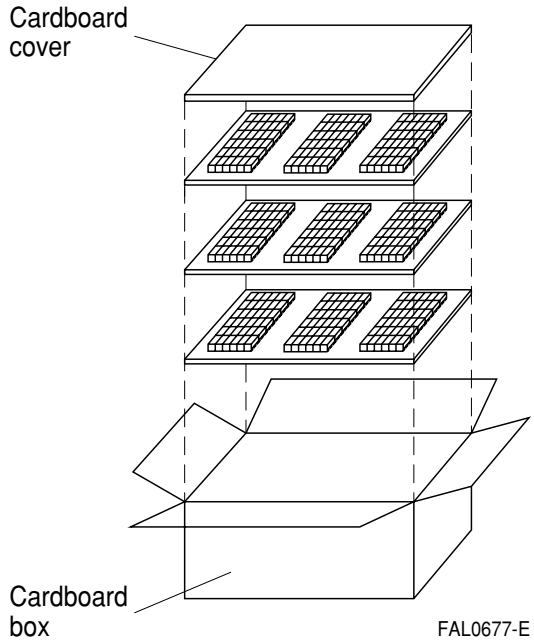

Advantages

- Environmentally friendly solution with easy-to-recycle materials
- Suitable for all cores larger than E 30
- Good protection of mating surface
- Film can be peeled back very easily
- Code numbers printed on cores can be read through transparent film

Cores for which skin packing is used:

E 47, ELP 43, I 43, ER 32; special types on request.